VGN-T51B/T71B/T91PS/T91PSY/T91S
VGN-T240P/T250/T250P/T260P/T270P
VGN-T2XP/T2XRP
VGN-T16RLPS/T26C/T26SP/T27C/T27GP/T27LP/T27TP

SERVICE MANUAL

Ver. 5 2005B

Revision History

Area	Model	Lineup	
Japanese	Japanese	VGN-T51B/L	
		VGN-T71B/L	
		VGN-T71B/T	
		VGN-T91PS*	
		VGN-T91PSY*	
		VGN-T91S*	
American	US Canadian	VGN-T240P/L	2 [MA]
		VGN-T250/L	
		VGN-T250P/L	
		VGN-T250P/S	
		VGN-T260P/L	2 [MA]
		VGN-T270P/L	
European	AEP/UK	VGN-T2XP/L	2 [MA]
		VGN-T2XP/S	2 [MA]
		VGN-T2XRP/S	2 [MA]
Asian/Oceania/ South Africa	International	VGN-T16RLPS	3 [MA]
		VGN-T26SP/S	1 [MA]
		VGN-T27GP/L	2 [MA]
		VGN-T27GP/S	2 [MA]
		VGN-T27LP/L	3 [MA]
		VGN-T27LP/S	3 [MA]
		VGN-T27TP/L	2 [MA]
		VGN-T27TP/S	2 [MA]
	Chinese	VGN-T26C/L	3 [MA]
		VGN-T26C/S	3 [MA]
		VGN-T26C/T	3 [MA]
		VGN-T27C/L	3 [MA]

* : CTO Model

9-876-404-05

Confidential

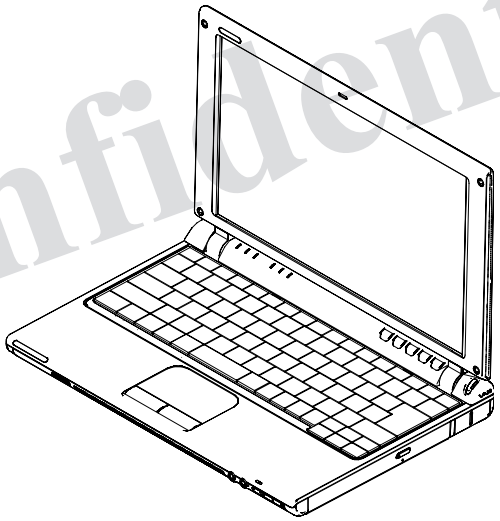

WiFi CERTIFIED

MEMORY STICK™

i™ S400

VAIO

- Design and specifications are subject to change without notice.
- 本機の仕様および外観は、改良のため予告なく変更することがありますが、ご了承ください。

PERSONAL COMPUTER

SONY®

Information in this document is subject to change without notice.

Sony, VAIO and CLIE are trademarks or registered trademarks of Sony. Microsoft,Windows, Windows Media, Outlook, Bookshelf and other Microsoft products are trademarks or registered trademarks of Microsoft Corporation in the United States and other countries. The word Bluetooth and the Bluetooth logo are trademarks of Bluetooth SIG, Inc. AMD, AMD logo, AMD Duron and combinations there of, 3DNow!, are trademarks of Advanced Micro Devices, Inc. Intel Inside logo, Pentium and Celeron are trademarks or registered trademarks of Intel Corporation. Transmeta, the Transmeta logo, Crusoe Processor, the Crusoe logo and combinations there of are trademarks of Transmeta Corporation in the USA and other countries. Graffiti, HotSync, PalmModem, and Palm OS are registered trademarks, and the Hotsync logo and Palm are trademarks of Palm, Inc. or its subsidiaries. (M) and Motrola are trademarks of Motrora, Inc. Other Motrola products and services with (R) mark like Dragomball are the trademarks of Motrola, Inc.

All other names of systems, products and services in this manual are trademarks or registered trademarks of their respective owners. In this manual, the (TM) or (R) mark are not specified.

Caution Markings for Lithium/Ion Battery - The following or similar texts shall be provided on battery pack of equipment or in both the operating and the service instructions.

CAUTION: Danger of explosion if battery is incorrectly replaced. Replace only with the same or equivalent type recommended by the manufacturer. Discard used batteries according to the manufacturer's instructions.

CAUTION: The battery pack used in this device may present a fire or chemical burn hazard if mistreated. Do not disassemble, heat above 100°C (212°F) or incinerate. Dispose of used battery promptly. Keep away from children.

CAUTION: Changing the back up battery.

- Overcharging, short circuiting, reverse charging, multilati on or incineration of the cells must be avoided to prevent one or more of the following occurrences; release of toxic materials, release of hydrogen and/or oxygen gas, rise in surface temperature.
- If a cell has leaked or vented, it should be replaced immediately while avoiding to touch it without any protection.

CAUTION – CLASS 3B VISIBLE AND INVISIBLE LASER RADIATION WHEN OPEN. AVOID EXPOSURE TO THE BEAM.

Service and Inspection Precautions

1. Obey precautionary markings and instructions

Labels and stamps on the cabinet, chassis, and components identify are as requiring special precautions. Be sure to observe these precautions, as well as all precautions listed in the operating manual and other associated documents.

2. Use designated parts only

The set's components possess important safety characteristics, such as noncombustibility and the ability to tolerate large voltages. Be sure that replacement parts possess the same safety characteristics as the originals. Also remember that the ⚠ mark, which appears in circuit diagrams and parts lists, denotes components that have particularly important safety functions; be extra sure to use only the designated components.

3. Always follow the original design when mounting parts and routing wires

The original layout includes various safety features, such as inclusion of insulating materials (tubes and tape) and the mounting of parts above the printer board. In addition, internal wiring has been routed and clamped so as to keep it away from hot or high-voltage parts. When mounting parts or routing wires, therefore, be sure to duplicate the original layout.

4. Inspect after completing service

After servicing, inspect to make sure that all screws, components, and wiring have been returned to their original condition. Also check the area around the repair location to ensure that repair work has caused no damage, and confirm safety.

5. When replacing chip components...

Never reuse components. Also remember that the negative side of tantalum capacitors is easily damaged by heat.

6. When handling flexible print boards...

- The temperature of the soldering-iron tip should be about 270°C.
- Do not apply the tip more than three times to the same pattern.
- Handle patterns with care; never apply force.

Caution: Remember that hard disk drives are easily damaged by vibration. Always handle with care.

ATTENTION AU COMPOSANT AYANT RAPPORT À LA SÉCURITÉ!

LES COMPOSANTS IDENTIFÉS PAR UNE MARQUE ⚠ SUR LES DIAGRAMMES SCHÉMATIQUES ET LA LISTE DES PIÈCES SONT CRITIQUES POUR LA SÉCURITÉ DE FONCTIONNEMENT. NE REMPLACER CES COMPOSANTS QUE PAR DES PIÈSES SONY DONT LES NUMÉROS SONT DONNÉS DANSCE MANUEL OU DANS LES SUPPÉMENTS PUBLIÉS PAR SONY.

Confidential

TABLE OF CONTENTS

Section	Title	Page
CHAPTER 1.	**SPECIFICATIONS**	
1-1.	Specifications	1-1
		(to 1-2)
CHAPTER 2.	**BLOCK DIAGRAM**	2-1
		(to 2-1)
CHAPTER 3.	**FRAME HARNESS DIAGRAM**	3-1
		(to 3-2)
CHAPTER 4.	**EXPLODED VIEWS AND PARTS LIST**	
How to identify the VGN-T91PSY		4-2
Palmrest		
	P-1	4-3
Main Board		
	M-1	4-5
Bottom		
	B-1	4-7
HDD		
	H-1	4-9
LCD		
	L-1. 10.6-inch TFT WXGA (Brightness) — Made by SH —	4-11
Accessories		
	A-1	4-13
		(to 4-13)
CHAPTER 5.	**OTHERS**	
5-1.	The Barcode Label	5-1
5-2.	Precautions for Handling the Drive	5-2
		(to 5-2)

History of the changes is shown as the "Revision History" at the end of this data.

変更履歴は,“Revision History”として,本データ末に記載してあります。

Confidential

VGN-T51B/T71B/T91PS/T91PSY/T91S (J)
VGN-T240P/T250/T250P/T260P/T270P (AM)
VGN-T2XP/T2XRP (EU)
VGN-T16RLPS/T26C/T26SP/T27C/T27GP/T27LP/T27TP (AO)

CHAPTER 1.
SPECIFICATIONS

1-1. Specifications

	J								AM	
Model	VGN-T71B/L	VGN-T71B/T	VGN-T51B/L	VGN-T91PS*	VGN-T91PSY* (28194425)	VGN-T91PSY* (28194424)	VGN-T91PSY* (28194423)	VGN-T91S*	VGN-T270P/L	VGN-T250P/L
CPU	ULV-PM/Do/753/1.20GHz	ULV-PM/Do/753/1.20GHz	ULV-CelM/Do/373/1GHz	ULV-PM/Do/753/1.20GHz or ULV-CelM/Do/373/1GHz	ULV-PM/Do/753/1.20GHz	ULV-PM/Do/753/1.20GHz	ULV-CelM/Do/373/1GHz	ULV-PM/Do/753/1.20GHz or ULV-CelM/Do/373/1GHz	ULV-PM/Do/753/1.20GHz	ULV-PM/Do/753/1.20GHz
Chipset	Intel 855GME	Intel 855GME	Intel 855GME	Intel 855GME	Intel 855GME			Intel 855GME	Intel 855GME	Intel 855GME
LCD	10.6 WXGA (BR)	10.6 WXGA (BR)	10.6 WXGA (BR)	10.6 WXGA (BR)	10.6 WXGA (BR)	10.6 WXGA (BR)	10.6 WXGA (BR)	10.6 WXGA (BR)	10.6 WXGA (BR)	10.6 WXGA (BR)
HDD	60GB	60GB	60GB	60GB or 40GB	60GB or 40GB	40GB	40GB	60GB or 40GB	60GB	60GB
Memory	512MB on-board	512MB on-board	256MB on-board	1GB(512MB on-board+512MBx1) or 512MB on-board or 256MB on-board	512MB on-board	256MB on-board	256MB on-board	1GB(512MB on-board+512MBx1) or 512MB on-board or 256MB on-board	1GB(512MB on-board+512MBx1)	512MB on-board
QUANTITY[MAX]	1GB	1GB	768MB	1GB(512MB on-board model) or 768MB(256 on-board model)	1GB	768MB	768MB	1GB(512MB on-board model) or 768MB(256 on-board model)	1GB	1GB
Optical	SuperMulti/9.5/x2	SuperMulti/9.5/x2	SuperMulti/9.5/x2	Combo/9.5/x24 or SuperMulti/9.5/x2	Combo/9.5/x24 or SuperMulti/9.5/x2	Combo/9.5/x24 or SuperMulti/9.5/x2	Combo/9.5/x24	Combo/9.5/x24 or SuperMulti/9.5/x2	DVD+-RW/9.5/x4	DVD+-RW/9.5/x4
Wireless LAN	802.11b/g	802.11b/g	802.11b/g	802.11b/g	802.11b/g	802.11b/g	802.11b/g	802.11b/g	802.11b/g	802.11b/g
AC adaptor	VGP-AC16V7	VGP-AC16V7	VGP-AC16V7	VGP-AC16V7	VGP-AC16V7	VGP-AC16V7	VGP-AC16V7	VGP-AC16V7	VGP-AC16V8	VGP-AC16V8
Battery	VGP-BPS3A	VGP-BPS3A	VGP-BPS3A	VGP-BPS3A	VGP-BPS3A	VGP-BPS3A	VGP-BPS3A	VGP-BPS3A	VGP-BPS3A	VGP-BPS3A
Bluetooth	×	×	×	×	×	×	×	×	○	○
Felica	×	×	×	○ or ×	×	×	×	○ or ×	×	×
Color Variation	Blue	Brown	Blue	Brown or Blue or Carbon	Blue	Blue	Blue	Brown or Blue or Carbon	Blue	Blue
Key Board	Japanese Key Board	Japanese Key Board	Japanese Key Board	English Key Board or Japanese Key Board	Japanese Key Board	Japanese Key Board	Japanese Key Board	English Key Board or Japanese Key Board	English Key Board	English Key Board
OS	XP Home	XP Home	XP Home	XP Pro	XP Pro	XP Pro	XP Pro	XP Home	XP Pro	XP Pro
Office	2003 Personal	2003 Personal	2003 Personal	2003 Personal or 2003 Professional or None	2003 Personal or None	None	None	2003 Personal or 2003 Professional or None	None	CTO

	AM				EU			AO		
Model	VGN-T250P/S	VGN-T250/L	VGN-T260P/L	VGN-T240P/L	VGN-T2XP/L	VGN-T2XP/S	VGN-T2XRP/S	VGN-T27GP/L	VGN-T27GP/S	VGN-T27TP/L
CPU	ULV-PM/Do/753/1.20GHz	ULV-PM/Do/753/1.20GHz	ULV-PM/Do/753/1.20GHz	ULV-PM/Do/753/1.20GHz	ULV-PM/Do/753/1.20GHz	ULV-PM/Do/753/1.20GHz	ULV-PM/Do/753/1.20GHz	ULV-PM/Do/753/1.20GHz	ULV-PM/Do/753/1.20GHz	ULV-PM/Do/753/1.20GHz
Chipset	Intel 855GME	Intel 855GME	Intel 855GME	Intel 855GME	Intel 855GME	Intel 855GME	Intel 855GME	Intel 855GME	Intel 855GME	Intel 855GME
LCD	10.6 WXGA (BR)	10.6 WXGA (BR)	10.6 WXGA (BR)	10.6 WXGA (BR)	10.6 WXGA (BR)	10.6 WXGA (BR)	10.6 WXGA (BR)	10.6 WXGA (BR)	10.6 WXGA (BR)	10.6 WXGA (BR)
HDD	60GB	60GB	60GB	60GB	60GB	60GB	60GB	60GB	60GB	60GB
Memory	512MB on-board	512MB on-board	1GB(512MB on-board+512MBx1)	512MB on-board	512MB on-board	512MB on-board	512MB on-board	512MB on-board	512MB on-board	512MB on-board
QUANTITY[MAX]	1GB	1GB	1GB	1GB	1GB	1GB	1GB	1GB	1GB	1GB
Optical	DVD+-RW/9.5/x4	DVD+-RW/9.5/x4	Combo/9.5/x24	Combo/9.5/x24	DVD+-RW/9.5/x4	DVD+-RW/9.5/x4	DVD+-RW/9.5/x4	DVD+-RW/9.5/x4	DVD+-RW/9.5/x4	DVD+-RW/9.5/x4
Wireless LAN	802.11b/g	802.11b/g	802.11b/g	802.11b/g	802.11b/g	802.11b/g	802.11b/g	802.11b/g	802.11b/g	802.11b/g
AC adaptor	VGP-AC16V8	VGP-AC16V8	VGP-AC16V8	VGP-AC16V8	VGP-AC16V8	VGP-AC16V8	VGP-AC16V8	VGP-AC16V8	VGP-AC16V8	VGP-AC16V8
Battery	VGP-BPS3A	VGP-BPS3A	VGP-BPS3A	VGP-BPS3A	VGP-BPS3A	VGP-BPS3A	VGP-BPS3A	VGP-BPS3A	VGP-BPS3A	VGP-BPS3A
Bluetooth	○	○	○	○	○	○	×	○	○	○
Felica	×	×	×	×	×	×	×	×	×	×
Color Variation	Silver	Blue	Blue	Blue	Blue	Silver	Silver	Blue	Silver	Blue
Key Board	English Key Board	English Key Board	English Key Board	English Key Board	-	-	-	-	-	-
OS	XP Pro	XP Home	XP Pro	XP Pro	XP Pro	XP Pro	XP Pro	XP Pro	XP Pro	XP Pro
Office	None	None	None	None	None	None	None	None	None	None
			② [MA]	② [MA]	② [MA]	② [MA]	② [MA]	① [MA]	① [MA]	② [MA]

・The trademarks of registered trademarks of above table, refer to page 2.
・The model that is accompanied by asterisk (*) is the CTO model.
・As for the T91PSY, the Specifications are different from each Product Code.
Please refer to the page 4-2 for how to identify the Product Code.
・本表中の商標・登録商標については，2ページをご参照ください。
・機種名に（*）がつくものはCTOモデルです。
・T91PSYはProduct Codeによってspecificationsが違います。
Product Codeの確認方法は4-2ページを参照してください。

	AO								
Model	VGN-T27TP/S	VGN-T27LP/L	VGN-T27LP/S	VGN-T26SP/S	VGN-T16RLPS	VGN-T27C/L	VGN-T26C/L	VGN-T26C/S	VGN-T26C/T
CPU	ULV-PM/Do/753/1.20GHz	ULV-PM/Do/753/1.20GHz	ULV-PM/Do/753/1.20GHz	ULV-PM/Do/733/1.10GHz	ULV-PM/Do/733/1.10GHz	ULV-PM/Do/753/1.20GHz	ULV-PM/Do/733/1.10GHz	ULV-PM/Do/733/1.10GHz	ULV-PM/Do/733/1.10GHz
Chipset	Intel 855GME	Intel 855GME	Intel 855GME	Intel 855GME	Intel 855GME	Intel 855GME	Intel 855GME	Intel 855GME	Intel 855GME
LCD	10.6 WXGA (BR)	10.6 WXGA (BR)	10.6 WXGA (BR)	10.6 WXGA (BR)	10.6 WXGA (BR)	10.6 WXGA (BR)	10.6 WXGA (BR)	10.6 WXGA (BR)	10.6 WXGA (BR)
HDD	60GB	60GB	60GB	40GB	40GB	60GB	40GB	40GB	40GB
Memory	512MB on-board	512MB on-board	512MB on-board	512MB on-board	512MB on-board	512MB on-board	256MB on-board	256MB on-board	256MB on-board
QUANTITY[MAX]	1GB	1GB	1GB	1GB	1GB	1GB	768MB	768MB	768MB
Optical	DVD+-RW/9.5/x4	DVD+-RW/9.5/x4	DVD+-RW/9.5/x4	Combo/9.5/x24	Combo/9.5/x24	Combo/9.5/x24	Combo/9.5/x24	Combo/9.5/x24	Combo/9.5/x24
Wireless LAN	802.11b/g	802.11b/g	802.11b/g	802.11b/g	802.11b/g	802.11b/g	802.11b/g	802.11b/g	802.11b/g
AC adaptor	VGP-AC16V8	VGP-AC16V8	VGP-AC16V8	VGP-AC16V8	VGP-AC16V8	VGP-AC16V8	VGP-AC16V8	VGP-AC16V8	VGP-AC16V8
Battery	VGP-BPS3A	VGP-BPS3A	VGP-BPS3A	VGP-BPS3A	VGP-BPS3A	VGP-BPS3A	VGP-BPS3A	VGP-BPS3A	VGP-BPS3A
Bluetooth	○	×	×	×	×	○	○	○	○
Felica	×	×	×	×	×	×	×	×	×
Color Variation	Silver	Blue	Silver	Silver	Silver	Blue	Blue	Silver	Brown
Key Board	-	-	-	-	-	-	-	-	-
OS	XP Pro	XP Pro	XP Pro	XP Pro	XP Pro	XP Home	XP Home	XP Home	XP Home
Office	None	None	None	None	None	None	None	None	None
	△2 [MA]	△3 [MA]	△3 [MA]	△2 [MA]	△3 [MA]	△3 [MA]	△3 [MA]	△3 [MA]	△3 [MA]

・The trademarks of registered trademarks of above table, refer to page 2.
・The model that is accompanied by asterisk (*) is the CTO model.
・本表中の商標・登録商標については，2ページをご参照ください。
・機種名に（*）がつくものはCTOモデルです。
組み合わせについてはCTO Informationをご確認ください。

△2 [MA]

Confidential

VGN-T51B/T71B/T91PS/T91PSY/T91S (J)
VGN-T240P/T250/T250P/T260P/T270P (AM)
VGN-T2XP/T2XRP (EU)
VGN-T16RLPS/T26C/T26SP/T27C/T27GP/T27LP/T27TP (AO)

(END)

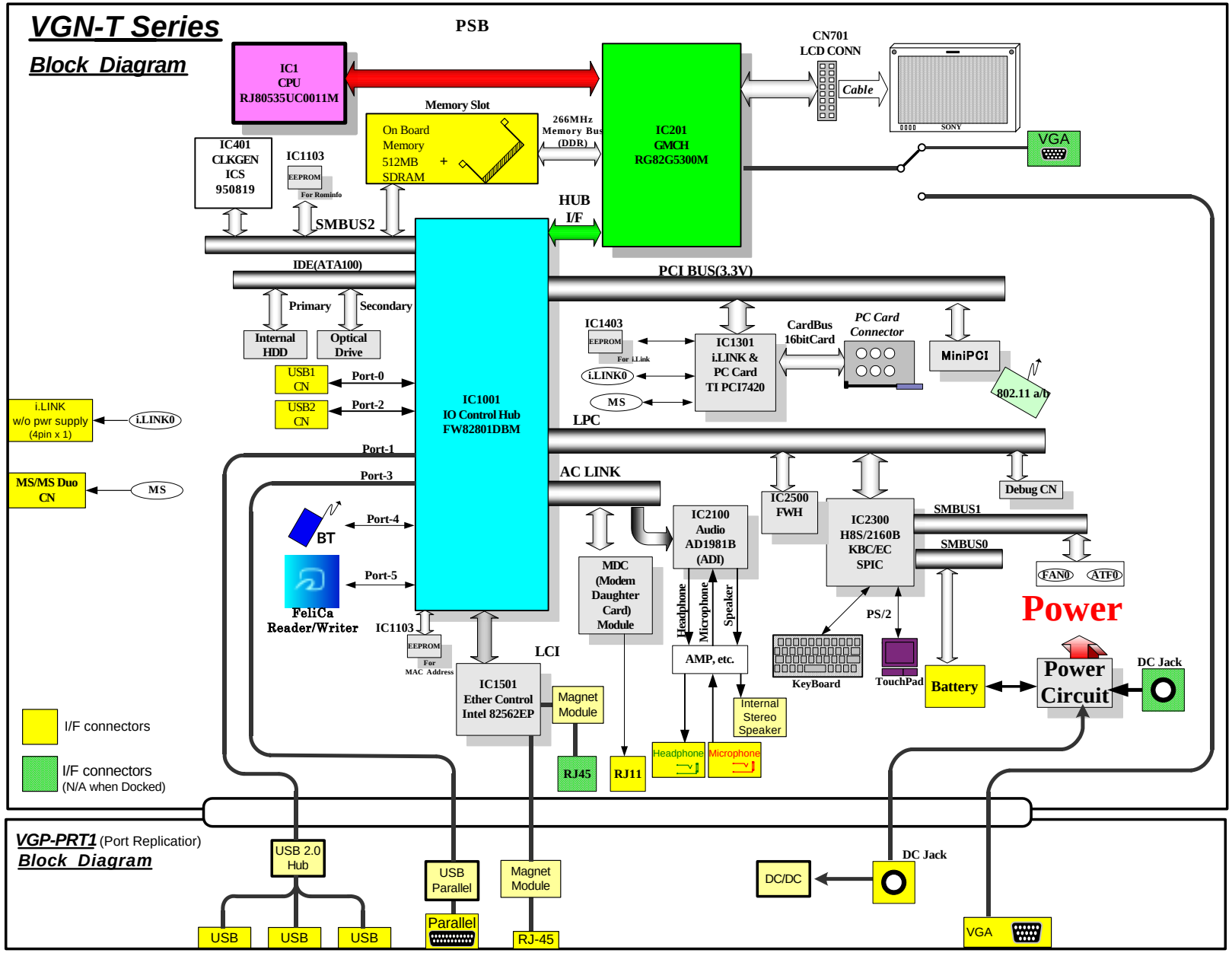

Confidential

VGN-T51B/T71B/T91PS/T91PSY/T91S (J)
VGN-T240P/T250/T250P/T260P/T270P (AM)
VGN-T2XP/T2XRP (EU)
VGN-T16RLPS/T26C/T26SP/T27C/T27GP/T27LP/T27TP (AO)

CHAPTER 3.
FRAME HARNESS DIAGRAM

– HDD HI –

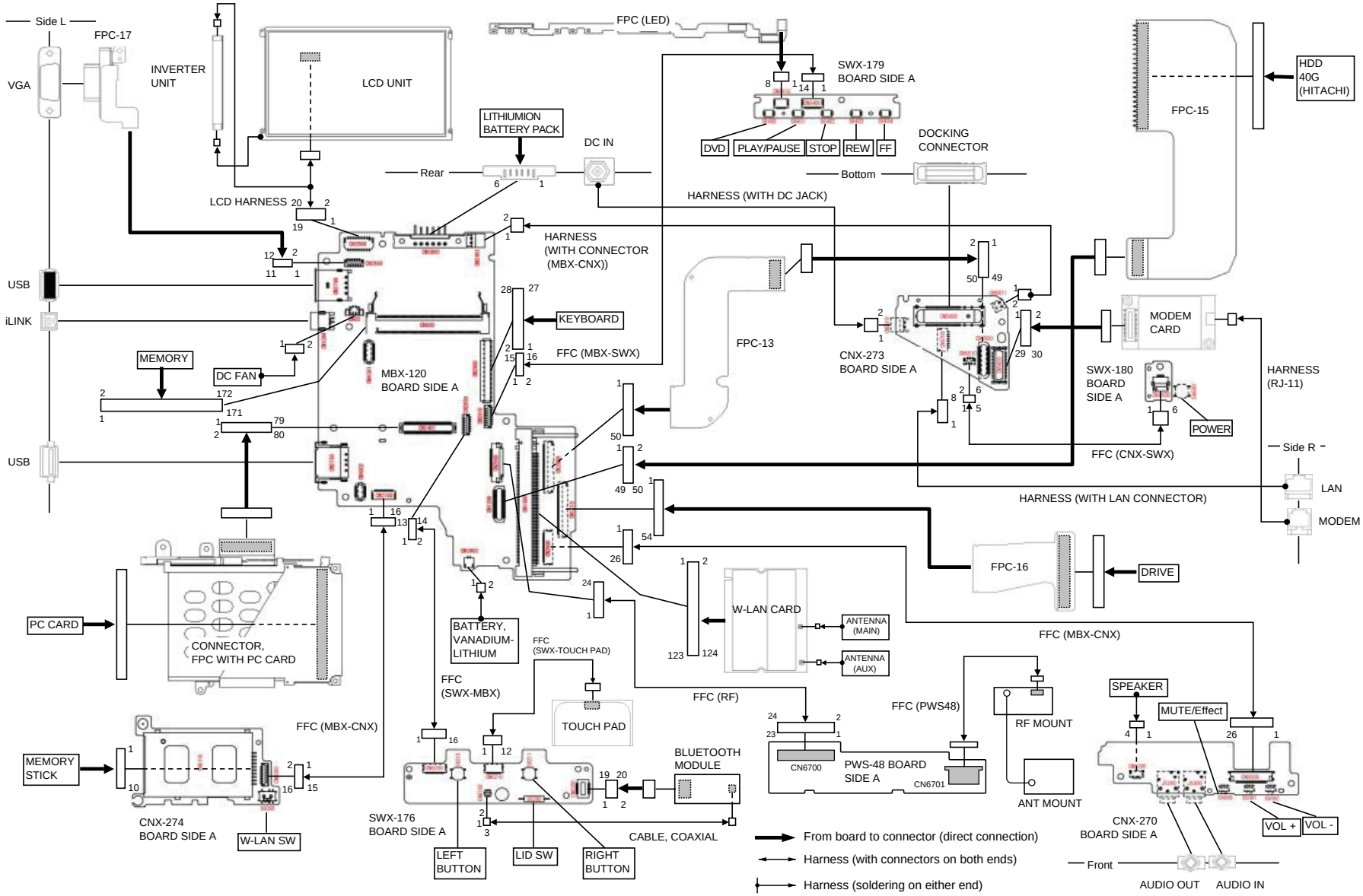

Confidential

VGN-T51B/T71B/T91PS/T91PSY/T91S (J)
VGN-T240P/T250/T250P/T260P/T270P (AM)
VGN-T2XP/T2XRP (EU)
VGN-T16RLPS/T26C/T26SP/T27C/T27GP/T27LP/T27TP (AO)

– HDD TO –

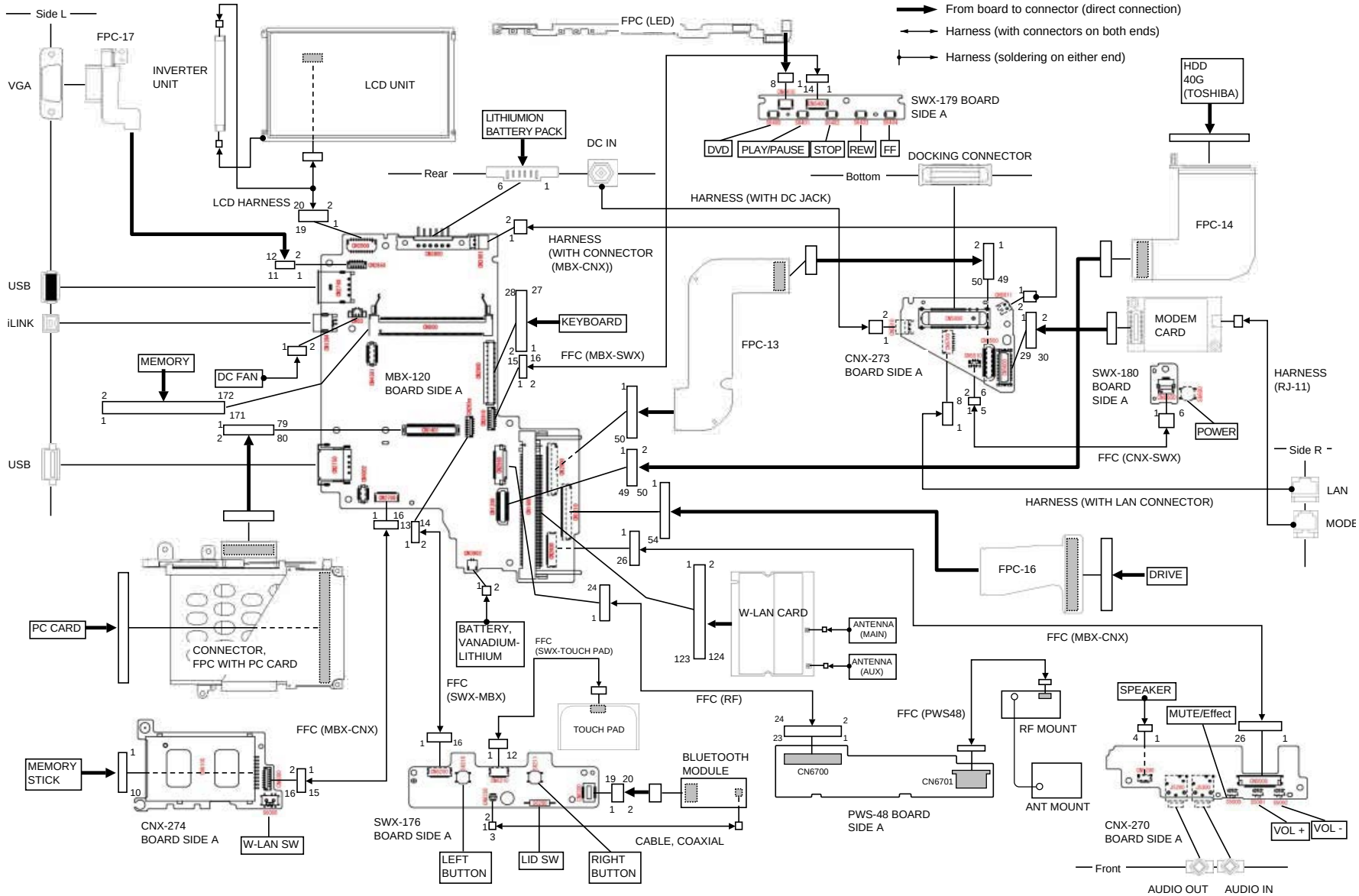

Confidential

VGN-T51B/T71B/T91PS/T91PSY/T91S (J)
VGN-T240P/T250/T250P/T260P/T270P (AM)
VGN-T2XP/T2XRP (EU)
VGN-T16RLPS/T26C/T26SP/T27C/T27GP/T27LP/T27TP (AO)

CHAPTER 4.
EXPLODED VIEWS AND PARTS LIST

- The parts list is compiled by blocks of a palmrest and bottom etc. The sections of the parts list are different depending on the model. Please refer to list of contents shown in the below.

- 分解図と部品表は，パームレスト，ボトムなどのブロックごとに分かれています。機種によって部品表のセクションが異なりますので，詳細は右下の一覧表を参照してください。

Section — Page

How to identify the VGN-T91PSY 4-2

Palmrest

P-1 4-3

Main Board

M-1 4-5

Bottom

B-1 4-7

HDD

H-1 4-9

LCD

L-1. 10.6-inch TFT WXGA (Brightness)

— Made by SH — 4-11

Accessory

A-1 4-13

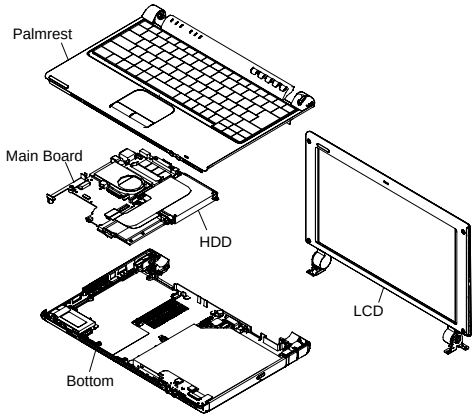

			Palmrest	Main Board	Bottom	HDD	LCD	Accessory
	J	T71B/L	P-1	M-1	B-1	H-1	L-1	A-1
		T71B/T	P-1	M-1	B-1	H-1	L-1	A-1
		T51B/L	P-1	M-1	B-1	H-1	L-1	A-1
		T91PS*	P-1	M-1	B-1	H-1	L-1	A-1
		T91PSY*	P-1	M-1	B-1	H-1	L-1	A-1
		T91S*	P-1	M-1	B-1	H-1	L-1	A-1
	AM	T270P/L	P-1	M-1	B-1	H-1	L-1	A-1
		T250P/L	P-1	M-1	B-1	H-1	L-1	A-1
		T250P/S	P-1	M-1	B-1	H-1	L-1	A-1
		T250/L	P-1	M-1	B-1	H-1	L-1	A-1
2 [MA]		T260P/L	P-1	M-1	B-1	H-1	L-1	A-1
2 [MA]		T240P/L	P-1	M-1	B-1	H-1	L-1	A-1
2 [MA]	EU	T2XP/L	P-1	M-1	B-1	H-1	L-1	A-1
2 [MA]		T2XP/S	P-1	M-1	B-1	H-1	L-1	A-1
2 [MA]		T2XRP/S	P-1	M-1	B-1	H-1	L-1	A-1
1 [MA]	AO	T27GP/L	P-1	M-1	B-1	H-1	L-1	A-1
1 [MA]		T27GP/S	P-1	M-1	B-1	H-1	L-1	A-1
2 [MA]		T27TP/L	P-1	M-1	B-1	H-1	L-1	A-1
2 [MA]		T27TP/S	P-1	M-1	B-1	H-1	L-1	A-1
3 [MA]		T27LP/L	P-1	M-1	B-1	H-1	L-1	A-1
3 [MA]		T27LP/S	P-1	M-1	B-1	H-1	L-1	A-1
2 [MA]		T26SP/S	P-1	M-1	B-1	H-1	L-1	A-1
3 [MA]		T16RLPS	P-1	M-1	B-1	H-1	L-1	A-1
3 [MA]		T27C/L	P-1	M-1	B-1	H-1	L-1	A-1
3 [MA]		T26C/L	P-1	M-1	B-1	H-1	L-1	A-1
3 [MA]		T26C/S	P-1	M-1	B-1	H-1	L-1	A-1
3 [MA]		T26C/T	P-1	M-1	B-1	H-1	L-1	A-1

* : CTO model

NOTE:

- Items marked "*" are not stocked since they are seldom required for routine service. Some delay should be anticipated when ordering these items.
- The mechanical parts with no reference number in the exploded views are not supplied.
- When two or more parts are shown, use the part described first as the main part.
- The parts marked " $ " are the High Value Modules (HVM).
- The parts marked " # " are the parts on which barcode label is attached. For the barcode label, refer to CHAPTER 5.
- The parts marked "&" are the "Customer Replacable Parts (CRP)" that can be replaced by Field Customer Support. Especially the parts with the <&> mark require the special attention to use them. Here fore, check first whether the desired part is one of the targetted parts of the Customer Replaceable Parts (CRP), or the non-targetted parts by referring to the exploded view.

【使用上の注意】

- *印の部品は常備在庫しておりません。
- 図面番号のない部品は供給しません。
- 併記部品の場合，上部記載部品をメイン部品として使用してください。
- 部品名称の前に$印のついた部品は，High Value Module（HVM）です。
- 商品名称の前に#印のついた部品は，バーコードラベル貼付部品です。
  バーコードラベルについてはCHAPTER 5を参照してください。
- 部品名称の前に&印のついた部品は，お客様窓口などでも交換可能なCustomer Replacable Part（CRP）です。
  特に<&>のついた部品は，使い分けが必要な部品ですので，分解図でCustomer Replacable Parts対象部品か，対象外部品かを必ず御確認ください。

The components identified by mark ⚠ or dotted line with mark ⚠ are critical for safety. Replace only with part number specified.

Les composants identifiés par une marque ⚠ sont critiques pour la sécurité. Ne les remplacer que par une pièce portant le numéro spécifié.

⚠印の部品，または⚠印付きの点線で囲まれた部品は，安全性を維持するために重要な部品です。従って交換時は，必ず指定の部品を使用して下さい。

Confidential

VGN-T51B/T71B/T91PS/T91PSY/T91S (J)
VGN-T240P/T250/T250P/T260P/T270P (AM)
VGN-T2XP/T2XRP (EU)
VGN-T16RLPS/T26C/T26SP/T27C/T27GP/T27LP/T27TP (AO)

How to identify the VGN-T91PSY
VGN-T91PSYの判別方法

The T91PSY is using different parts by the Product Code.
Check the Product Code with the Set, then refer to the corresponding section of the parts list and select the parts to be used.

T91PSYはProduct Codeによって使用する部品が違います。
セットでProduct Codeを確認してから、部品表の該当箇所を参照し、使用する部品を選択してください。

【How to identify the VGN-T91PSY 】
【Product Codeの確認方法】

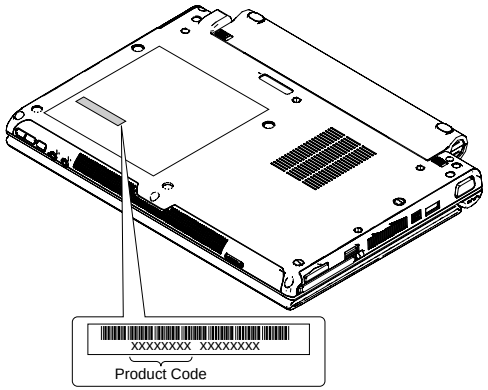

【Example of Parts List】
【部品表記載例】

Check the Product Code in parentheses which is written beside a model name, and select the parts to be used.
機種名の横に記載されている、括弧内のProduct Codeを確認してから、使用する部品を選択してください。

						J								AM			
Ref.No.	Part No.	High Value Modules (HVM)	Barcode Label (BL)	Customer Replaceable Parts (CRP)	Description	T71B/L	T71B/T	T51B/L	T91PS*	T91S*	T91PSY* (28194425)	T91PSY* (28194424)	T91PSY* (28194423)	T270P/L	T250P/L	T250P/S	T250/L
2	1-805-554-21				BLUETOOTH MODULE									●	●	●	●
3	X-2022-970-1				BRACKET (PAC) ASSY	●	●	●	●	●	●	●	●	●	●	●	●
6	1-827-266-41				CABLE, COAXIAL (WITH U.F.L CON)									●	●	●	●
20	1-478-986-11		#		KEYBOARD UNIT (JP)	●	●	●	●	●	●	●	●				
	1-478-986-21		#		KEYBOARD UNIT (US)				●	●				●	●	●	●
	1-478-986-31		#		KEYBOARD UNIT (KR)												

P-1. Palmrest

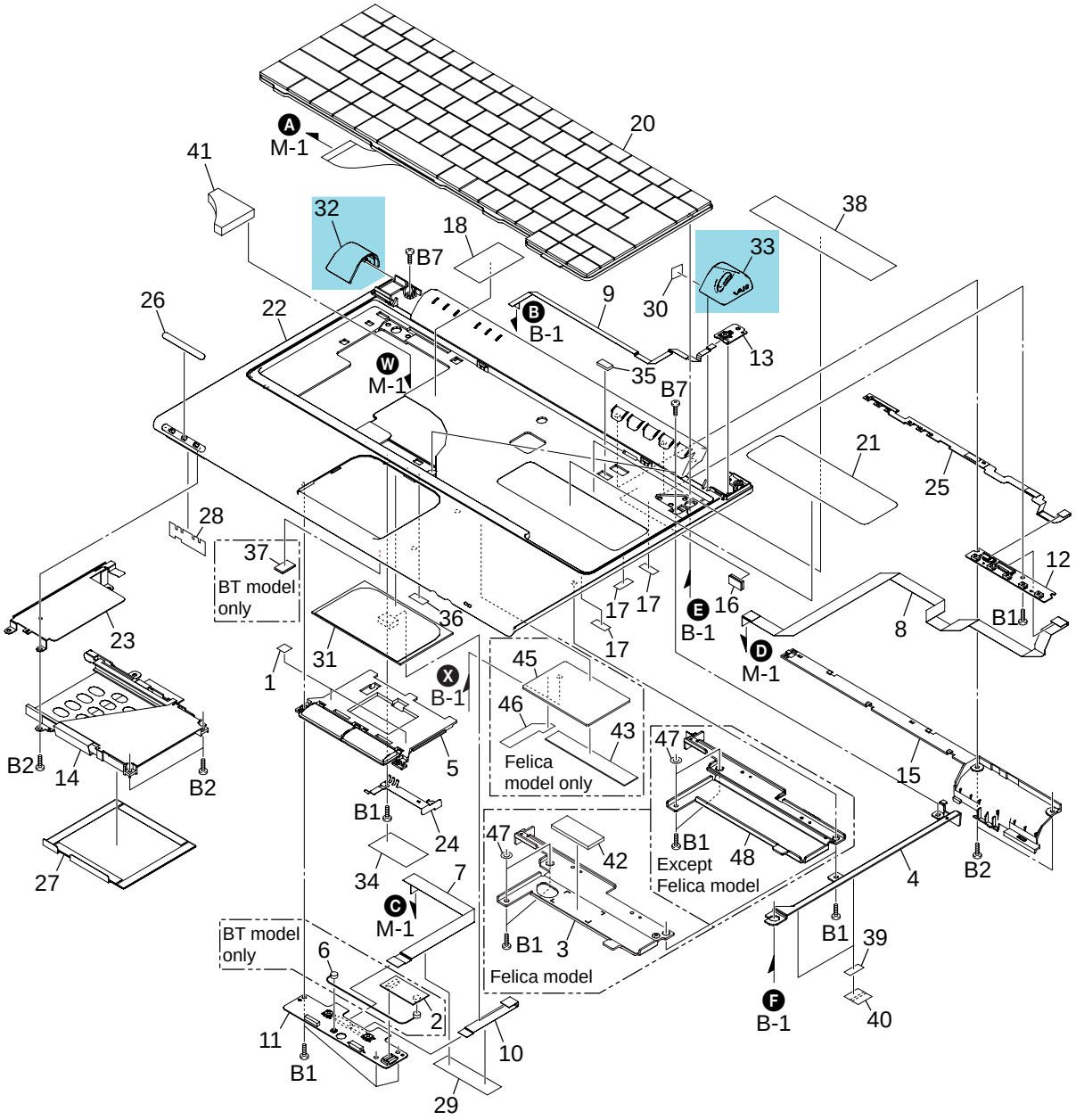

Confidential

P-1. Palmrest

Ref.No.	Part No.		Description
1	2-349-366-01		ADHESIVE TAPE(TP)
* 4	2-159-841-01		BRACKET (PAR)
5	X-2024-925-2		BUTTON TP ASSY
7	1-829-795-11		CABLE,FLEXIBLE FLAT (SWX176)
8	1-829-797-13		CABLE,FLEXIBLE FLAT (SWX179)
9	1-829-798-13		CABLE,FLEXIBLE FLAT (SWX180)
10	1-829-796-11		CABLE,FLEXIBLE FLAT (TP)
11	A-1090-038-A	$	SWX-176 (S)
12	A-1090-039-A	$	SWX-179 (S)
13	A-1090-040-A	$	SWX-180 (S)
14	1-818-866-11		CONNECTOR, FPC WITH PC CARD
15	2-159-838-01		COVER (PALM)
16	2-187-193-01		CUSHION (OP)
17	2-349-529-01		CUSHION (PA)
18	2-546-040-01		SHEET (KEYBOARD)
21	2-187-191-01		LASER CAUTION LABEL
* 23	2-159-840-01		PLATE (PCC), SHIELD
24	2-159-835-01		PLATE (TP), GROUND
25	1-864-361-11		PWB,FLEXIBLE (LED)
27	2-187-194-02		SHEET (PCC)
28	2-349-375-02		SHEET (WLAN PALM)
29	4-676-302-01		TAPE (COMMON)
30	2-546-036-01		GASKET (COVER HR)
31	1-796-958-21		TOUCH PAD
32	2-159-836-02	&	COVER (HL)
33	X-2022-969-2	&	COVER (HR) ASSY
34	4-658-789-02		TAPE (HARNESS)
35	2-546-041-01		CUSHION (POP UP)
36	2-546-039-02		SHEET (BKT PALM)
38	2-548-815-01		SHEET (KEYBOARD RIGHT)
39	2-548-771-01		SHEET BKT PALM R S
40	2-548-772-01		SHEET BKT PALM R B
41	2-349-364-01		CUSHION(KB)
47	2-583-785-01		SPACER O
B1	4-676-936-01		+SCREW,O2 +SPECIAL HEAD SELF S
B2	4-642-229-01		TAPPING (B 2X)
B7	4-672-834-31		SCREW, +B EG GRIP

					J							AM						EU			AO												
Ref.No.	Part No.		Description		T71B/L	T71B/T	T51B/L	T91PS*	T91S*	T91PSY* (28194425)	T91PSY* (28194424)	T91PSY* (28194423)	T270P/L	T250P/L	T250P/S	T250/L	T260P/L	T240P/L	T2XP/L	T2XP/S	T2XRP/S	T27GP/L	T27GP/S	T27TP/L	T27TP/S	T27LP/L	T27LP/S	T26SP/S	T16RLPS	T27C/L	T26C/L	T26C/S	T26C/T
2	1-805-554-21		BLUETOOTH MODULE										●	●	●	●	●	●	●	●		●	●	●	●					●	●	●	●
3	X-2022-970-1		BRACKET (PAC) ASSY		●	●	●	●	●	●	●	●	●	●	●	●	●	●	●	●	●	●	●	●	●	●	●	●	●	●	●	●	●
6	1-827-266-41		CABLE, COAXIAL (WITH U.F.L CON)										●	●	●	●	●	●	●	●		●	●	●	●					●	●	●	●
20	1-478-986-11	#	KEYBOARD UNIT (JP)		●	●	●	●	●	●	●	●																					
	1-478-986-21	#	KEYBOARD UNIT (US)					●	●				●	●	●	●	●	●				●	●							●	●	●	●
⚠[MA]	1-478-986-31	#	KEYBOARD UNIT (KR)																							●	●		●				
⚠[MA]	1-478-986-41	#	KEYBOARD UNIT (TH)																									●					
⚠[MA]	1-478-986-51	#	KEYBOARD UNIT (TW)																					●	●								
⚠[MA]	1-478-986-61	#	(Portugal)...KEYBOARD UNIT (PT)																●														
⚠[MA]	1-478-988-11	#	(UK,Dutch)...KEYBOARD UNIT (GB)																●	●													
⚠[MA]	1-478-988-21	#	(German)...KEYBOARD UNIT (DE)																●	●													
⚠[MA]	1-478-988-31	#	(Swiss)...KEYBOARD UNIT (CH)																	●													
⚠[MA]	1-478-988-41	#	(Belgium/French)...KEYBOARD UNIT (FR)																●	●													
⚠[MA]	1-478-988-51	#	(Italian)...KEYBOARD UNIT (IT)																●	●													
⚠[MA]	1-478-988-61	#	(Spanish)...KEYBOARD UNIT (ES)																●	●													
⚠[MA]	1-478-986-71	#	(Russian)...KEYBOARD UNIT (RU)																		●												
22	X-2022-968-3		PALMREST ASSY		●	●	●			●	●	●	●	●	●	●	●	●	●	●	●	●	●	●	●	●	●	●	●	●	●	●	●
	X-2048-665-1		HOUSING PALMREST ASSY (F)					●	●																								
	X-2048-666-1		HOUSING PALMREST ASSY (CF) [Carbon]					●	●																								
26	2-159-839-02	&	SHEET (LED)										●	●	●	●	●	●	●	●		●	●	●	●					●	●	●	●
	2-159-839-12	&	SHEET (LED)		●	●	●	●	●	●	●	●									●					●	●	●	●				
37	2-187-192-01		CUSHION (BTM)										●	●	●	●	●	●	●	●		●	●	●	●					●	●	●	●
42	2-580-564-01		CUSHION ANTENNA (F)					●	●																								
43	2-586-421-01		BUSTERAID ANTENNA (F)					●	●																								
44	2-580-566-01		ADHESIVE TAPE ANTENNA (F)					●	●																								
45	A-1104-126-A	$	ANT MOUNT PWB (S)					●	●																								
46	2-590-815-01		GUIDE (F), SHEET					●	●																								
48	X-2048-680-1		BRACKET PALMREST C ASSY (F)					●	●																								
																⚠[MA]	⚠[MA]	⚠[MA]	⚠[MA]	⚠[MA]	⚠[MA]	⚠[MA]	⚠[MA]	⚠[MA]	⚠[MA]	⚠[MA]	⚠[MA]	⚠[MA]	⚠[MA]	⚠[MA]	⚠[MA]	⚠[MA]	⚠[MA]	⚠[MA]

- This parts list contains two different types of parts.
  The first type is the parts that are common to all models.
  The other type is the parts that are different depending on each model.
- As for the T91PSY, check the Product Code in a parenthesis which is written beside the model name, and select the parts to be used.
  Please refer to the page 4-2 for how to identify the Product Code.

- この部品表は，機種共通の部品と，機種によって使い分けが必要な部品に分かれています。
- T91PSYは機種名の横に記載されている、括弧内のProduct Codeを確認してから、使用する部品を選択してください。
  Product Codeの確認方法は4-2ページを参照してください。

Confidential

M-1. Main Board

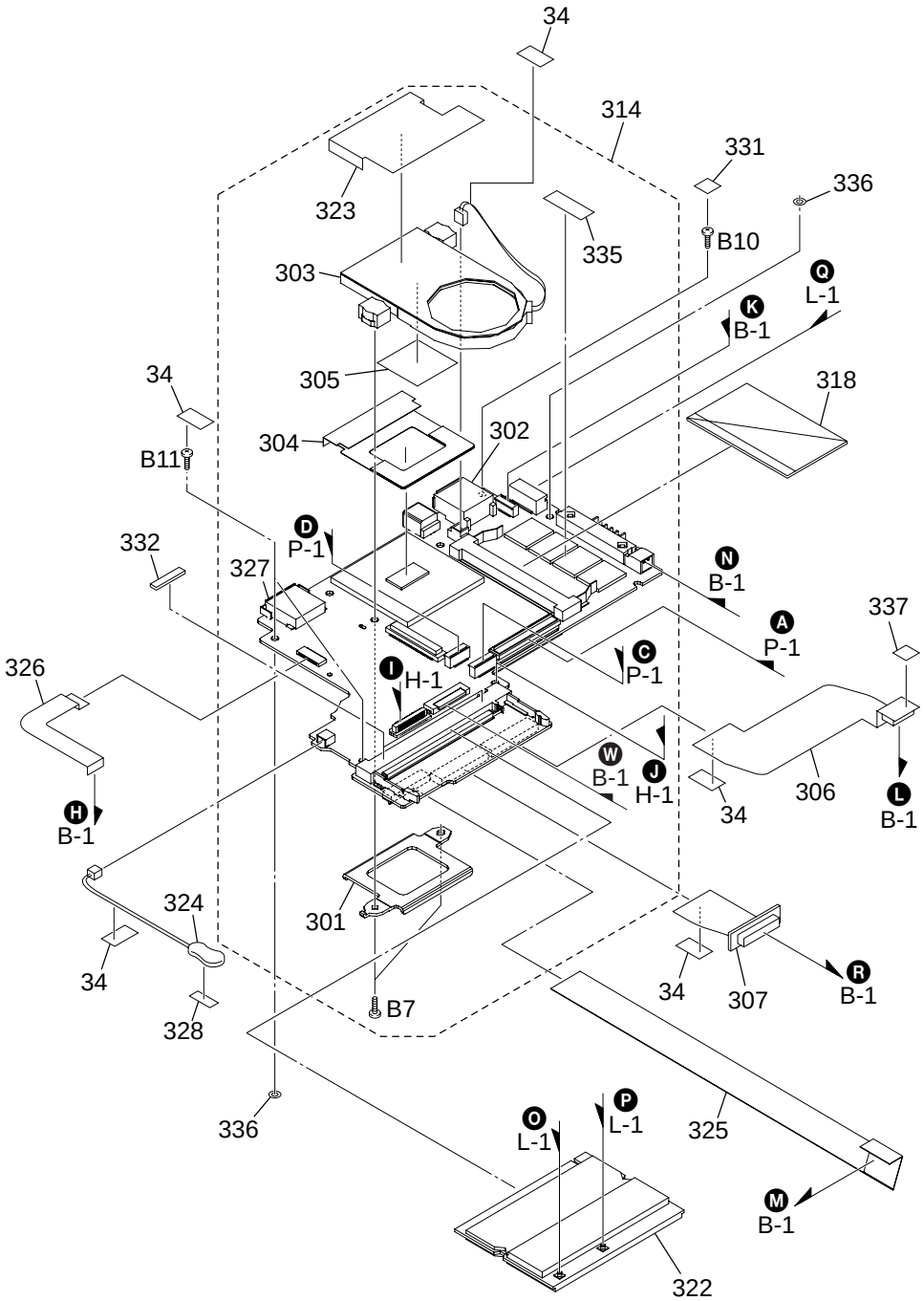

M-1. Main Board

Ref.No.	Part No.	Description
34	4-658-789-02	TAPE (HARNESS)
301	2-159-880-01	BRACKET (CPU)
302	1-794-548-21	CONNECTOR, USB(A)
303	1-787-245-21	FAN,DC
304	2-187-200-03	SHEET (CPU)
305	4-673-367-02	THERMAL SHEET(CPU)
306	A-1090-044-A	COMPLETE FPC FPC-13 (S)
307	A-1090-047-A	COMPLETE FPC FPC-16 (S)
323	2-187-198-02	COVER (FIN)
324	1-756-424-11	BATTERY, VANADIUM-LITHIUM
325	1-864-336-11	PWB,FLEXIBLE
326	1-864-471-11	PWB,FLEXIBLE
327	1-818-784-11	CONNECTOR
328	4-673-302-01	ADHESIVE TAPE(RJ)
331	2-514-300-01	CUSHION (SCREW)
332	2-514-301-01	CUSHION (WLAN SLOT)
335	2-547-546-01	CAUTION LABEL MEMORY L
336	2-187-373-01	SPACER(FAN)
337	4-661-451-01	ADHESIVE TAPE TOUCHPAD
B7	4-672-834-31	SCREW, +B EG GRIP
B10	4-672-834-51	SCREW, +B EG GRIP
B11	4-672-834-91	SCREW, +B EG GRIP

	Ref.No.	Part No.			Description	J								AM						EU		AO											
						T71B/L	T71B/T	T51B/L	T91PS*	T91S*	T91PSY* (28194425)	T91PSY* (28194424)	T91PSY* (28194423)	T270P/L	T250P/L	T250P/S	T250/L	T260P/L	T240P/L	T2XP/L	T2XP/S	T2XRP/S	T27GP/L	T27GP/S	T27TP/L	T27TP/S	T27LP/L	T27LP/S	T26SP/S	T16RLPS	T27C/L	T26C/L	T26C/S	T26C/T
	314	A-1104-099-A	$	#	MBX-120 (C10_2)-2 (S)			●	●	●			●																				
		A-1104-098-A	$	#	MBX-120 (C10_5)-2 (S)				●	●																							
⚠[MA]		A-1104-095-A	$	#	MBX-120 (P11_2)-2 (S)																										●	●	●
⚠[MA]		A-1104-094-A	$	#	MBX-120 (P11_5)-2 (S)																							●	●				
		A-1104-097-A	$	#	MBX-120 (P12_2)-2 (S)				●	●		●																					
		A-1104-096-A	$	#	MBX-120 (P12_5)-2 (S)	●	●		●	●	●			●	●	●	●	●	●	●	●	●	●	●	●	●	●			●			
	318	6-707-651-01			IC M463L6523BV0-CB3				●	●	●	●	●	●				●															
	322	1-761-864-15		#	WIRELESS LAN CARD									●	●	●	●	●	●						●	●							
		1-761-864-25		#	WIRELESS LAN CARD	●	●		●	●	●	●	●																				
⚠[MA]		1-761-864-34		#	WIRELESS LAN CARD															●	●	●	●	●			●	●	●	●	●	●	●
		1-789-014-21		#	CARD,WIRELESS LAN			●																									
																			⚠[MA]	⚠[MA]	⚠[MA]	⚠[MA]	⚠[MA]	⚠[MA]	⚠[MA]	⚠[MA]	⚠[MA]	⚠[MA]	⚠[MA]	⚠[MA]	⚠[MA]	⚠[MA]	⚠[MA]	⚠[MA]

- This parts list contains two different types of parts.
  The first type is the parts that are common to all models.
  The other type is the parts that are different depending on each model.
- As for the T91PSY, check the Product Code in a parenthesis which is written beside the model name, and select the parts to be used.
  Please refer to the page 4-2 for how to identify the Product Code.

- この部品表は，機種共通の部品と，機種によって使い分けが必要な部品に分かれています。
- T91PSYは機種名の横に記載されている、括弧内のProduct Codeを確認してから、使用する部品を選択してください。
  Product Codeの確認方法は4-2ページを参照してください。

B-1. Bottom

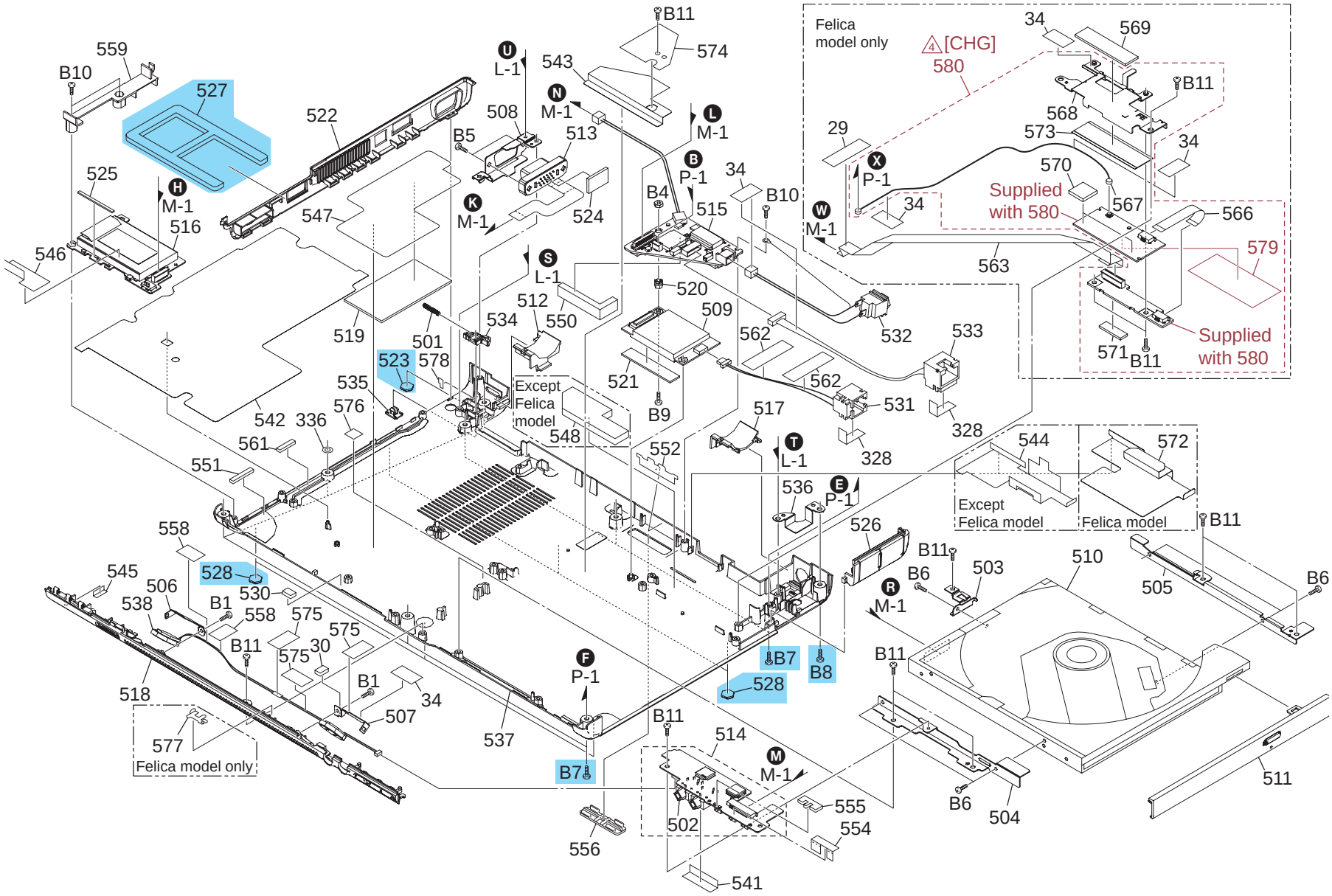

Confidential

VGN-T51B/T71B/T91PS/T91PSY/T91S (J)
VGN-T240P/T250/T250P/T260P/T270P (AM)
VGN-T2XP/T2XRP (EU)
VGN-T16RLPS/T26C/T26SP/T27C/T27GP/T27LP/T27TP (AO)

B-1. Bottom

Ref.No.	Part No.			Description
29	4-676-302-01			TAPE (COMMON)
30	2-546-036-01			GASKET (COVER HR)
34	4-658-789-02			TAPE (HARNESS)
328	4-673-302-01			ADHESIVE TAPE(RJ)
336	2-187-373-01			SPACER(FAN)
501	4-672-723-01			SPRING COMPRESSION COIL (A)
502	1-816-583-21			JACK, SMALL TYPE
503	2-348-452-01			BRACKET (OPC)
504	2-159-888-01			BRACKET (OPL)
505	2-159-889-02			BRACKET (OPR)
506	2-159-893-02			BRACKET (SPL)
507	2-159-894-02			BRACKET (SPR)
508	2-159-881-02			BRACKET (VGA)
509	1-761-606-15		#	CARD, MODEM
513	A-1090-048-A			COMPLETE FPC FPC-17 (S)
514	A-1104-980-A	$		CNX-270-2 (S)
515	A-1104-123-A	$		CNX-273-2 (S)
516	A-1090-043-A	$		CNX-274 (S)
519	2-190-700-02			CUSHION (GMCH)
520	2-159-865-01			STAND
521	2-582-513-02			CUSHION (MDC2)
523	4-670-189-11		&	CUSHION (UP)
524	2-190-638-01			CUSHION (VGA)
525	2-349-374-01			CUSHION (WLAN LED)
527	4-643-832-61		&	DUMMY CARD
528	2-177-286-01		&	FOOT
530	2-187-197-01			GASKET (SP)
531	1-962-037-21			HARNESS (RJ11)
532	1-963-317-11			HARNESS WITH DC JACK 2P
533	1-963-259-31			HARNESS,CONNECTOR WITH
534	2-159-879-02			HOOK (BT)
535	2-159-866-01			KNOB (BT)
536	2-177-444-01			PLATE (PR), GROUND
538	1-825-972-11			SPEAKER UNIT
541	2-349-989-01			SHEET (AUDIO)
542	2-187-199-02			SHEET (BT)
543	2-590-981-01			SHEET (MDC) 2
545	2-349-376-01			SHEET (WLAN LENS)
546	2-349-378-02			SHEET (WLAN MS)
547	2-190-699-01			SHEET GS
550	2-548-777-02			CUSHION (PT)
551	2-514-961-01			GASKET (MS)
552	2-547-841-01			SHEET (P)
554	2-548-691-01			TAPE (AUDIO)
555	2-349-365-02			CUSHION(SE)
558	-			KAPTON TAPE (10X20)
559	2-159-861-04			COVER (PCC)
561	2-583-663-01			GASKET (3X2X10)
562	4-677-810-11			TAPE BTM
574	2-590-982-01			COVER (MDC)
575	4-662-881-02			CUSHION, KEY BOARD
576	2-586-963-01			SPACER HARNESS (F)
578	2-592-081-01			SPACER (HINGE)
B1	4-676-936-01			+SCREW,O2 +SPECIAL HEAD SELF S
B4	4-673-751-01			NUT (M2) (TYPE2)
B5	4-674-716-01			SCREW (NO.4-40) (UNC)
B6	4-671-538-01			SCREW(M2X4), SPECIAL HEAD
B7	4-672-834-31		&	SCREW, +B EG GRIP
B8	4-672-834-41		&	SCREW, +B EG GRIP
B9	2-177-881-01			+B2X8
B10	4-672-834-51			SCREW, +B EG GRIP
B11	4-672-834-91			SCREW, +B EG GRIP

					J							AM					EU		AO												
	Ref.No.	Part No.			T71B/L	T71B/T	T51B/L	T91PS*	T91S*	T91PSY* (28194425)	T91PSY* (28194424)	T91PSY* (28194423)	T270P/L	T250P/L	T250P/S	T250/L	T260P/L	T240P/L	T2XP/L	T2XP/S	T2XRP/S	T27GP/L	T27GP/S	T27TP/L	T27TP/S	T27LP/L	T27LP/S	T26SP/S	T16RLPS	T27C/L	T26C/L	T26C/S	T26C/T
	510	A-1104-117-A	$	#				●	●	●	●	●					●	●										●	●	●	●	●	●
		A-1090-048-A	$	#									●	●	●	●			●	●	●	●	●	●	●	●	●						
		A-1104-116-A	$	#	●	●	●	●	●	●	●																						
	511	X-2022-971-5											●	●		●			●			●		●		●							
		X-2023-621-5						●	●	●		●					●	●												●	●		
		X-2048-649-1			●	●	●	●	●	●																							
		X-2023-619-4													●					●	●		●		●		●						
⚠ [MA]		X-2023-622-4																										●	●			●	
		X-2023-623-5						●	●																					●			●
		X-2048-651-1			●			●	●																								
		X-2048-648-1						●	●																								
		X-2048-647-1						●	●																								
	512	2-159-860-02			●		●	●	●	●		●	●	●		●	●	●	●			●		●		●				●	●		
		2-159-860-12						●	●						●					●	●		●		●		●	●	●	●		●	
		2-159-860-22			●			●	●																								●
		2-159-860-31						●	●																								
	517	2-159-862-02			●		●	●	●	●		●	●	●		●	●	●	●			●		●		●				●	●		
		2-159-862-12						●	●						●					●	●		●		●		●	●	●	●		●	
		2-159-862-22			●			●	●																								●
		2-159-862-31						●	●																								
	518	X-2022-972-4			●		●	●	●	●		●	●	●		●	●	●	●			●		●		●				●	●		
		X-2023-624-3													●					●	●		●		●		●	●	●			●	
		X-2023-625-4			●			●	●																								●
		X-2048-644-1						●	●																								
	522	2-159-858-04			●		●	●	●	●		●	●	●		●	●	●	●			●		●		●				●	●		
		2-159-858-13						●	●						●					●	●		●		●		●	●	●			●	
		2-159-858-24			●			●	●																								●
		2-159-858-31						●	●																								
	526	X-2023-099-2			●		●	●	●	●		●	●	●		●	●	●	●			●		●		●				●	●		
		X-2023-617-1						●	●						●					●	●		●		●		●	●	●			●	
		X-2023-618-2			●			●	●																								●
		X-2048-645-1						●	●																								
	537	2-159-878-02			●		●	●	●	●		●	●	●		●	●	●	●			●		●		●				●	●		
		2-159-878-12						●	●						●					●	●		●		●		●	●	●			●	
		2-159-878-22			●			●	●																								●
		2-159-878-31						●	●																								
	544	2-187-201-01			●	●	●	●	●	●		●	●	●	●	●	●	●	●	●	●	●	●	●	●	●	●	●	●	●	●	●	●
	548	2-187-202-01			●	●	●	●	●	●		●	●	●	●	●	●	●	●	●	●	●	●	●	●	●	●	●	●	●	●	●	●
	556	2-514-604-01			●	●	●	●	●	●		●	●	●		●	●	●	●			●		●		●				●	●		●
		2-514-604-11													●					●	●		●		●		●	●	●			●	
	563	1-830-336-11						●	●																								
⚠[CHG]	~~564~~	~~A-1104-124-A~~	~~$~~					~~●~~	~~●~~																								
⚠[CHG]	~~565~~	~~A-1104-125-A~~	~~$~~					~~●~~	~~●~~																								
	566	1-830-303-11						●	●																								
	567	1-830-396-11						●	●																								
	568	2-580-560-01						●	●																								
	569	2-580-561-01						●	●																								
	570	2-580-562-01						●	●																								
	571	2-580-563-01						●	●																								
	572	2-580-565-01						●	●																								
	573	2-585-727-01						●	●																								
	577	2-586-962-01						●	●																								
⚠[CHG]	579	2-595-608-01						●	●																								
⚠[CHG]	580	A-1118-330-A	$					●	●																								
																			⚠ [MA]	⚠ [MA]	⚠ [MA]	⚠ [MA]	⚠ [MA]	⚠ [MA]	⚠ [MA]	⚠ [MA]	⚠ [MA]	⚠ [MA]	⚠ [MA]	⚠ [MA]	⚠ [MA]	⚠ [MA]	⚠ [MA]

- This parts list contains two different types of parts.
  The first type is the parts that are common to all models.
  The other type is the parts that are different depending on each model.
- As for the T91PSY, check the Product Code in a parenthesis which is written beside the model name, and select the parts to be used.
  Please refer to the page 4-2 for how to identify the Product Code.

- この部品表は，機種共通の部品と，機種によって使い分けが必要な部品に分かれています。
- T91PSYは機種名の横に記載されている、括弧内のProduct Codeを確認してから、使用する部品を選択してください。
  Product Codeの確認方法は4-2ページを参照してください。

Confidential

H-1. HDD

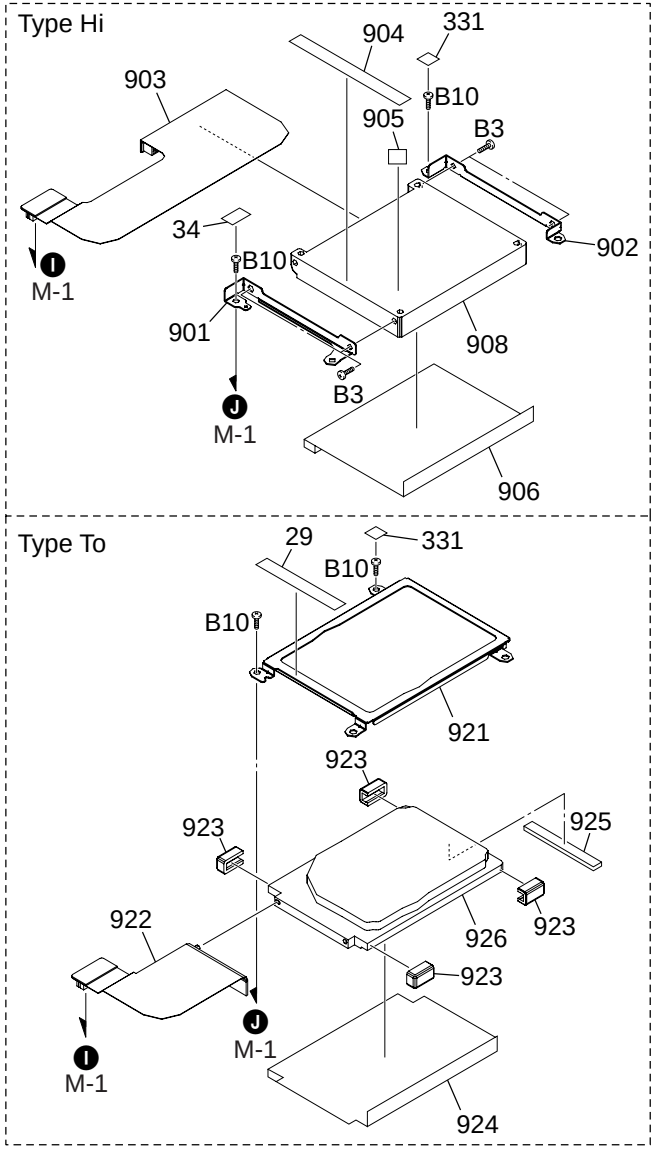
Type Hi
904
331
903
B10
905
B3
34
902
B10
M-1
901
908
B3
M-1
906
Type To
29
331
B10
B10
921
923
925
923
922
926
923
923
M-1
M-1
924

H-1. HDD

Type Hi

Ref.No.	Part No.	Description
34	4-658-789-02	TAPE (HARNESS)
331	2-514-300-01	CUSHION (SCREW)
* 901	2-159-885-01	BRACKET (HDDHIF)
* 902	2-159-886-01	BRACKET (HDDHIR)
903	A-1090-046-A	COMPLETE FPC FPC-15 (S)
904	2-514-299-01	CUSHION (HDDHI F)
905	2-349-373-01	CUSHION (HDDHI)
906	2-349-372-02	SHEET (HDDHI)
B3	4-679-325-01	PS SCREW M2.5
B10	4-672-834-51	SCREW, +B EG GRIP

Ref.No.	Part No.			Description	J								AM				EU			AO											
					T71B/L	T71B/T	T51B/L	T91PS*	T91S*	T91PSY* (28194425)	T91PSY* (28194424)	T91PSY* (28194423)	T270P/L	T250P/L	T250P/S	T250/L	T260P/L	T240P/L	T2XP/L	T2XP/S	T2XRP/S	T27GP/L	T27GP/S	T27TP/L	T27TP/S	T27LP/L	T27LP/S	T26SP/S	T16RLPS	T27C/L	T26C/L	T26C/S	T26C/T
908	A-1072-248-A	$	#	HDD 40GB (HI1.8-21) ASSY (S)				●	●	●	●	●																●					
	A-1104-118-A	$	#	HDD (60GB,HTC426060G9AT00) (S)	●	●	●	●	●	●			●	●	●	●	●	●	●	●	●	●	●	●	●								
					[MA]	[MA]	[MA]	[MA]	[MA]	[MA]	[MA]	[MA]	[MA]	[MA]	[MA]	[MA]	[MA]	[MA]	[MA]	[MA]	[MA]	[MA]	[MA]	[MA]	[MA]	[MA]	[MA]	[MA]	[MA]	[MA]	[MA]	[MA]

- This parts list contains two different types of parts.
  The first type is the parts that are common to all models.
  The other type is the parts that are different depending on each model.
- As for the T91PSY, check the Product Code in a parenthesis which is written beside the model name, and select the parts to be used.
  Please refer to the page 4-2 for how to identify the Product Code.

- この部品表は，機種共通の部品と，機種によって使い分けが必要な部品に分かれています。
- T91PSYは機種名の横に記載されている、括弧内のProduct Codeを確認してから、使用する部品を選択してください。
  Product Codeの確認方法は4-2ページを参照してください。

Type To

Ref.No.	Part No.		Description
29	4-676-302-01		TAPE (COMMON)
331	2-514-300-01		CUSHION (SCREW)
* 921	2-159-887-01	#	BRACKET (HDDTO)
922	A-1090-045-A		COMPLETE FPC FPC-14 (S)
923	2-159-884-01		CUSHION (HDD)
924	2-349-371-03		SHEET (HDDTO)
925	2-584-053-01		GASKET (5X2X35)
B10	4-672-834-51		SCREW, +B EG GRIP

Ref.No.	Part No.			Description	J								AM				EU			AO											
					T71B/L	T71B/T	T51B/L	T91PS*	T91S*	T91PSY* (28194425)	T91PSY* (28194424)	T91PSY* (28194423)	T270P/L	T250P/L	T250P/S	T250/L	T260P/L	T240P/L	T2XP/L	T2XP/S	T2XRP/S	T27GP/L	T27GP/S	T27TP/L	T27TP/S	T27LP/L	T27LP/S	T26SP/S	T16RLPS	T27C/L	T26C/L	T26C/S	T26C/T
926	A-1104-112-A	$	#	HDD(MK4006GAH-40GB) (S)				●	●	●	●	●																●					
	A-1104-113-A	$	#	HDD(MK8006GAH-80GB) (S)	●	●	●	●	●	●			●	●	●	●	●	●	●	●	●	●	●	●	●		●		●		●	●
					[MA]	[MA]	[MA]	[MA]	[MA]	[MA]	[MA]	[MA]	[MA]	[MA]	[MA]	[MA]	[MA]	[MA]	[MA]	[MA]	[MA]	[MA]	[MA]	[MA]	[MA]	[MA]	[MA]	[MA]	[MA]	[MA]	[MA]	[MA]

- This parts list contains two different types of parts.
  The first type is the parts that are common to all models.
  The other type is the parts that are different depending on each model.
- As for the T91PSY, check the Product Code in a parenthesis which is written beside the model name, and select the parts to be used.
  Please refer to the page 4-2 for how to identify the Product Code.

- この部品表は，機種共通の部品と，機種によって使い分けが必要な部品に分かれています。
- T91PSYは機種名の横に記載されている、括弧内のProduct Codeを確認してから、使用する部品を選択してください。
  Product Codeの確認方法は4-2ページを参照してください。

L-1. LCD 10.6-inch TFT WXGA (Brightness)
— Made by SH —

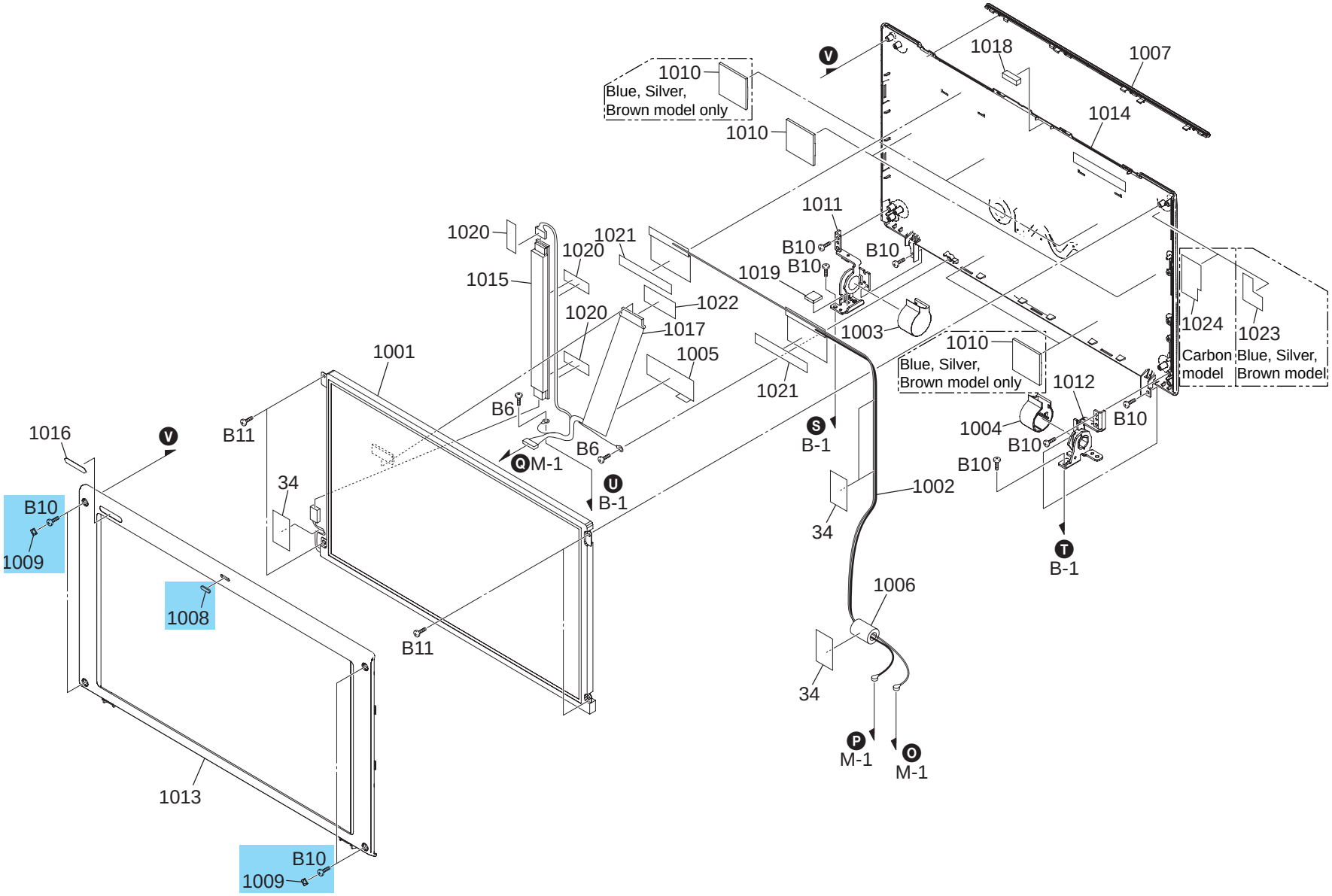

L-1. LCD 10.6-inch TFT WXGA (Brightness) — Made by SH —

Ref.No.	Part No.			Description
34	4-658-789-02			TAPE (HARNESS)
1001	A-8068-213-A	$	#	LCD (UNIT) (10.6TFT WXGA) (S)
1002	1-754-353-51			ANTENNA,FILM
1003	2-159-824-02			CAP (L)
1004	2-159-825-02			CAP (R)
1005	2-348-101-01			COPPER TAPE (LCD)
1006	1-500-847-11			CORE,FERRITE
1008	4-670-190-11		&	CUSHION (SIDE)
1009	2-178-223-01		&	CUSHION BZ
1010	2-188-040-01			CUSHION LCD
1011	2-159-830-01			HINGE (L)
1012	2-159-831-01			HINGE (R)
1013	2-159-829-02			HOUSING (BEZEL)
1015	1-479-155-21			INVERTER UNIT
1017	1-963-100-12			LCD HARNESS
1018	2-159-832-01			MAGNET
1019	2-349-775-01			CUSHION (HINGE L)
1020	-			KAPTON TAPE (10X40)
1021	-			FILAMENT TAPE (12X55)
1022	-			FILAMENT TAPE (9X20)
B6	4-671-538-01			SCREW(M2X4), SPECIAL HEAD
B10	4-672-834-51		<&>	SCREW, +B EG GRIP
B11	4-672-834-91			SCREW, +B EG GRIP

			J								AM						EU			AO												
Ref.No.	Part No.	Description	T71B/L	T71B/T	T51B/L	T91PS*	T91S*	T91PSY* (28194425)	T91PSY* (28194424)	T91PSY* (28194423)	T270P/L	T250P/L	T250P/S	T250/L	T260P/L	T240P/L	T2XP/L	T2XP/S	T2XRP/S	T27GP/L	T27GP/S	T27TP/L	T27TP/S	T27LP/L	T27LP/S	T26SP/S	T16RLPS	T27C/L	T26C/L	T26C/S	T26C/T
1007	2-159-826-02	COVER (WLAN) [Blue]	●		●	●	●	●	●	●	●	●		●	●	●	●			●		●		●				●	●		
	2-159-826-11	COVER (WLAN) [Silver]											●					●	●		●		●		●	●	●			●	
	2-159-826-22	COVER (WLAN) [Brown]		●		●	●																								●
	2-159-826-31	COVER (WLAN) [Carbon]				●	●																								
1014	A-1090-054-A	DISPLAY (BL) LOGO ASSY (S) [Blue]	●		●	●	●	●	●	●	●	●		●	●	●	●			●		●		●				●	●		
	A-1090-056-A	DISPLAY (SI) LOGO ASSY (S) [Silver]											●					●	●		●		●		●	●	●			●	
	A-1090-055-A	DISPLAY (BR) LOGO ASSY (S) [Brown]		●		●	●																								●
	A-1104-083-A	DISPLAY (CA) LOGO ASSY (S) [Carbon]				●	●																								
1016	2-580-567-01	LABEL (ID)									●																				
	2-580-567-11	LABEL (ID)										●	●																		
	2-580-567-21	LABEL (ID)												●																	
△[MA]	2-580-567-31	LABEL (ID)													●																
△[MA]	2-580-567-41	LABEL (ID)														●															
△[MA]	2-580-789-01	LABEL (ID)															●	●													
△[MA]	2-580-789-11	LABEL (ID)																	●												
	2-580-870-01	LABEL (ID)	●	●																											
	2-580-870-11	LABEL (ID)			●																										
	2-580-870-21	LABEL (ID)				●	●																								
	2-580-870-31	LABEL (ID)				●	●																								
	2-580-870-41	LABEL (ID)						●	●	●																					
△[MA]	2-580-893-01	LABEL (ID)																		●	●										
△[MA]	2-580-893-11	LABEL (ID)																				●	●								
△[MA]	2-580-893-21	LABEL (ID)																						●	●						
△[MA]	2-580-893-31	LABEL (ID)																								●					
△[MA]	2-580-893-41	LABEL (ID)																									●				
△[MA]	2-581-019-01	LABEL (ID)																										●			
△[MA]	2-581-019-11	LABEL (ID)																											●	●	●
1023	2-591-293-01	SPACER LCD	●	●	●	●	●	●	●	●	●	●	●	●	●	●	●	●	●	●	●	●	●	●	●	●	●	●	●	●	●
1024	2-592-334-01	SPACER LCD (B)				●	●																								
																	△[MA]	△[MA]	△[MA]	△[MA]	△[MA]	△[MA]	△[MA]	△[MA]	△[MA]	△[MA]	△[MA]	△[MA]	△[MA]	△[MA]	△[MA]

- This parts list contains two different types of parts.
  The first type is the parts that are common to all models.
  The other type is the parts that are different depending on each model.
- As for the T91PSY, check the Product Code in a parenthesis which is written beside the model name, and select the parts to be used.
  Please refer to the page 4-2 for how to identify the Product Code.

- この部品表は，機種共通の部品と，機種によって使い分けが必要な部品に分かれています。
- T91PSYは機種名の横に記載されている、括弧内のProduct Codeを確認してから、使用する部品を選択してください。
  Product Codeの確認方法は4-2ページを参照してください。

A-1. Accessories

2001
AC Adaptor

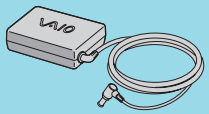

2002
Battery

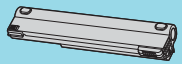

1 [MA]
2003
Power Cord

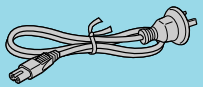

1 [MA]
2004
Power-Supply Cord

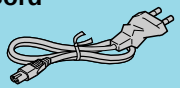

2005
Power Cord

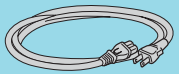

3 [MA]
2006
Power Cord

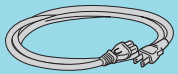

2007
Power Cord

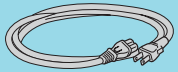

3 [MA]
2008
Power-supply Cord

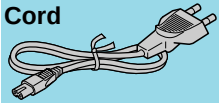

2 [MA]
2010
Conversion Plug 3P Adaptor

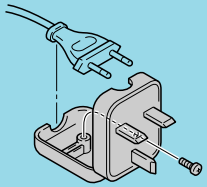

3 [MA]
2011
Headphone

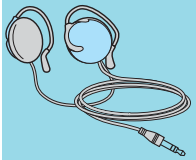

	Ref.No.	Part No.			Description	J								AM						EU			AO											
						T71B/L	T71B/T	T51B/L	T91PS+	T91S+	T91PSY+ (28194425)	T91PSY+ (28194424)	T91PSY+ (28194423)	T270P/L	T250P/L	T250P/S	T250/L	T260P/L	T240P/L	T2XP/L	T2XP/S	T2XRP/S	T27GP/L	T27GP/S	T27TP/L	T27TP/S	T27LP/L	T27LP/S	T26SP/S	T16RLPS	T27C/L	T26C/L	T26C/S	T26C/T
	2001	1-478-583-21	$	&	AC ADAPTOR	●	●	●	●	●	●	●	●																					
		1-478-860-21	$	&	ADAPTOR,AC									●	●	●	●	●	●	●	●	●	●	●	●	●	●	●	●	●	●	●	●	●
	2002	A-1110-268-A	$	&	BATTERY PACK,LITHIUM ION(J) (S)	●	●	●	●	●	●	●	●																					
		A-1110-269-A	$	&	BATTERY PACK,LITHIUM ION(U) (S)									●	●	●	●	●	●															
[MA]		A-1110-270-A	$	&	BATTERYPACK,LITHIUM ION(EI) (S)															●	●	●	●	●	●	●	●	●	●					
[MA]		1-756-545-11	$	&	BATTERY PACK,LITHIUM ION																									●	●	●	●
[MA]	2003	1-555-074-32		&	CORD, POWER																		●	●										
[MA]	2004	1-827-481-21		&	POWER-SUPPLY CORD															●	●	●	●	●					●					
	2005	1-829-237-21		&	CORD, POWER									●	●	●	●	●	●						●	●								
[MA]	2006	1-782-476-22		&	CORD, POWER																									●	●	●	●
	2007	1-827-160-21		&	POWER-SUPPLY CORD	●	●	●	●	●	●	●	●																					
[MA]	2008	1-823-947-32		&	POWER-SUPPLY CORD																						●	●		●				
[MA]	2010	1-770-019-51		&	(UK)...ADAPTOR, CONVERSION PLUG															●	●													
[MA]	2011	8-954-048-93		&	HEADPHONE MDR-Q22LP/S2 SET																									●	●	●	●
[MA]	-	1-816-429-12		&	(UK)...PHONE PLUG (GB)															●	●													
	-	2-584-063-01		&	Instruction Manual (XP Professional, XP Home Edition)	●	●	●	●	●	●	●	●																					
	-	2-586-764-01			WELCOME MAT (T) (EN) (JDS)									●	●	●	●	●	●															
	-	2-586-766-01			LEGAL SAFETY BOOKLET (T) (EN)									●	●	●	●	●	●															
[MA]	-	2-584-789-11			(UK,Dutch,Swiss,Belgium,Portugal)...HW SPEC															●	●													
[MA]	-	2-584-789-21			(German,Swiss)...HW SPEC															●	●													
[MA]	-	2-584-789-31			(Belgium,Swiss,French)...HW SPEC															●	●													
[MA]	-	2-584-789-41			(Italian,Swiss)...HW SPEC															●	●													
[MA]	-	2-584-789-51			(Spanish,Belgium)...HW SPEC															●	●													
[MA]	-	2-584-789-61			(Dutch)...HW SPEC																●													
[MA]	-	2-584-789-71			(Portugal)...HW SPEC																●													
[MA]	-	2-584-789-81			(Russian)...HW SPEC																	●												
[MA]	-	2-585-355-11			SPEC SHEET																		●	●					●					
[MA]	-	2-585-355-21			SPEC SHEET																						●	●		●				
[MA]	-	2-585-355-31			SPEC SHEET																										●	●	●	●
	-	2-585-355-41			SPEC SHEET																				●	●								
[MA]	-	2-585-319-11			TROUBLESHOOTING GUIDE (D)																		●	●					●					
[MA]	-	2-585-319-21			TROUBLESHOOTING GUIDE (D)																						●	●		●				
[MA]	-	2-585-319-41			TROUBLESHOOTING GUIDE (D)																				●	●								
[MA]	-	2-585-358-31			TROUBLESHOOTING GUIDE(D)																									●	●	●	●
[MA]	-	2-586-138-01			SAFETY/REGULATIONS GUIDE 2																		●	●	●	●	●	●	●	●	●	●	●
[MA]	-	2-584-870-01			(UK,Dutch,Swiss,Belgium,Portugal,French,German, Spanish,Italian)...TROUBLE GUIDE (D)															●	●													
[MA]	-	2-584-870-11			(Portugal,Russian)...TROUBLE GUIDE (D)																●	●												
[MA]	-	2-584-873-01			(UK,Dutch,Swiss,Belgium,Portugal,French,German, Spanish,Italian)...REGULATORY BOOKLET (D)															●	●													
[MA]	-	2-593-038-01			(Russian)...REGULATORY BOOKLET(RU)(D)																	●												
																				[MA]	[MA]	[MA]	[MA]	[MA]	[MA]	[MA]	[MA]	[MA]	[MA]	[MA]	[MA]	[MA]	[MA]

- This parts list contains two different types of parts.
  The first type is the parts that are common to all models.
  The other type is the parts that are different depending on each model.
- As for the T91PSY, check the Product Code in a parenthesis which is written beside the model name, and select the parts to be used.
  Please refer to the page 4-2 for how to identify the Product Code.

- この部品表は，機種共通の部品と，機種によって使い分けが必要な部品に分かれています。
- T91PSYは機種名の横に記載されている、括弧内のProduct Codeを確認してから、使用する部品を選択してください。
  Product Codeの確認方法は4-2ページを参照してください。

5-1. The Barcode Label

The hatched portion of the barcode is used as the repair data.
バーコードラベルの網掛け部は，修理データとして使用いたします。

[MBX-120 Board]
(Side A)

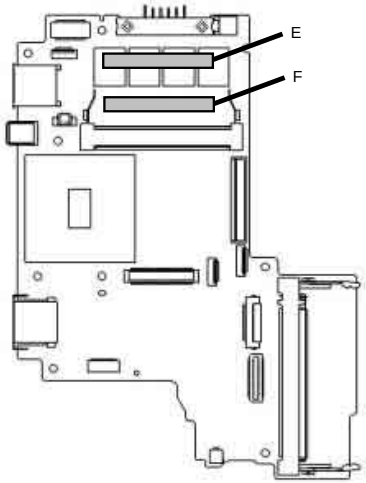

[MBX-120 Board]
(Side B)

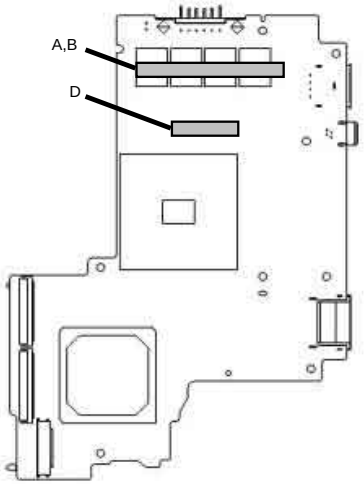

[LCD Unit]
(Rear)

[Keyboard Unit]
(Rear)

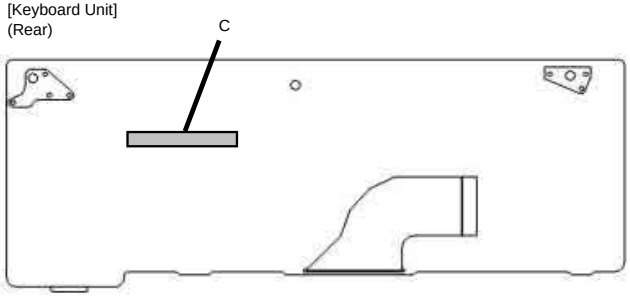

[MODEM Card]

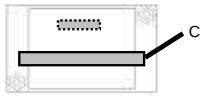

[W-LAN Card]

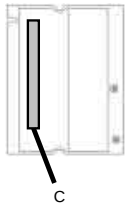

[Drive]
(Rear)

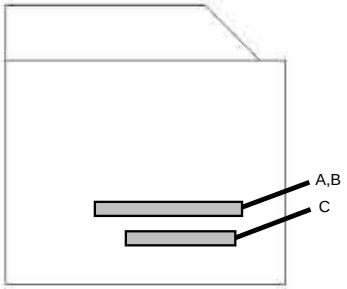

[HDD (TOSHIBA)]
(Top)

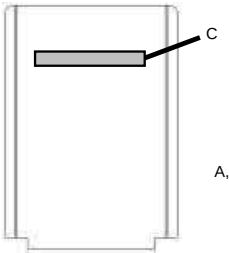

[BRACKET (HDDTO)]
(Top)

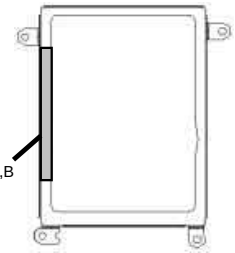

[HDD (HITACHI)]
(Top)

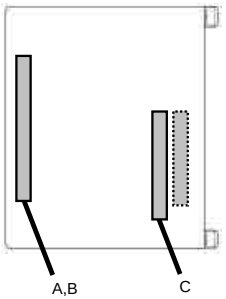

A : Part No.
B : Serial No.
C : Maker Barcode
D : Revision No.
E : Global User ID (iLink)
F : Mac Address

Confidential

5-2. Precautions for Handling the Drive

In performing a repair, observe the following precautions.
修理の際には以下の注意事項を厳守してください。

① Do not turn the power switch on until the palmrest and the keyboard are installed completely.
① パームレストやキーボードを**完全に取り付けるまでは**電源を入れないでください。

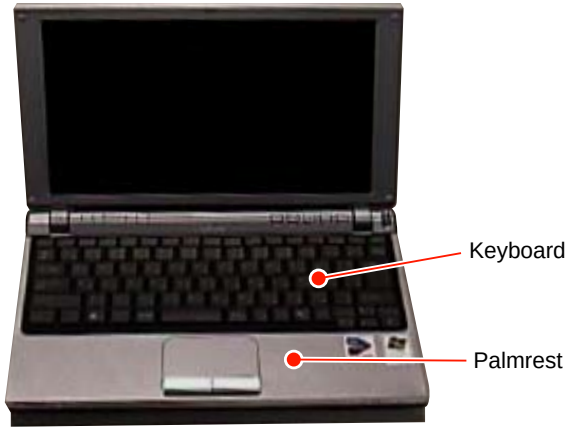

② If the power switch is to be turned on with the set in disassembled state, be sure to load a dummy disc in the drive.
② 分解した状態で電源を入れる必要がある場合には**“必ず”**ダミーのDiscをドライブにセットしておいてください。

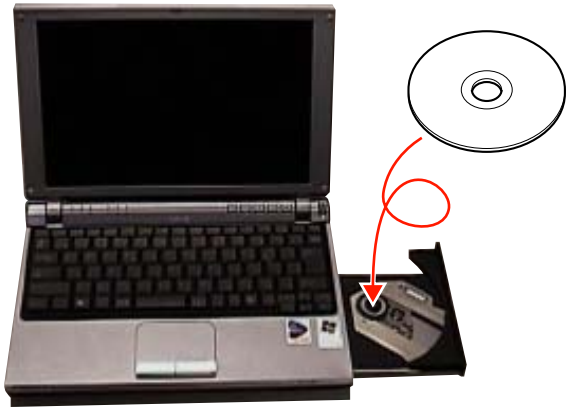

③ If the power switch is to be turned on with the set in disassembled state for checking the drive condition, be sure to turn the power switch on with the tray drawn out.
③ 分解した状態で電源を入れ，ドライブの状態を確認する必要がある場合には**“必ず”**トレイを引き出した状態で電源を入れてください。

Tray drawn-out state
トレイが引き出された状態

VGN-T51B/T71B/T91PS/T91PSY/T91S (J)
VGN-T240P/T250/T250P/T260P/T270P (AM)
VGN-T2XP/T2XRP (EU)
VGN-T16RLPS/T26C/T26SP/T27C/T27GP/T27LP/T27TP (AO)

List of VGN-T Series (As of February, 2005)

Service Manual Part No.	Model Name			
	J	AM	EU	AO
9-876-390-XX	VGN-T30B/L VGN-T30B/T VGN-T50B/L VGN-T50B/T VGN-T50PZ VGN-T70B/L VGN-T90PS∗ VGN-T90S∗	VGN-T130FP/L VGN-T140/L VGN-T140P/L VGN-T150/L VGN-T150P/L VGN-T150P/T VGN-T160P/L VGN-T170P/L	VGN-T1XP/L VGN-T1XP/T	VGN-T15C/S VGN-T15C/T VGN-T16GP/S VGN-T16LP/S VGN-T16SP/S VGN-T17C/S VGN-T17GP/S VGN-T17GP/T VGN-T17LP/S VGN-T17LP/T VGN-T17TP/S VGN-T17TP/T
9-876-404-XX	VGN-T51B/L VGN-T71B/L VGN-T71B/T VGN-T91PS∗ VGN-T91PSY∗ VGN-T91S∗	VGN-T240P/L VGN-T250/L VGN-T250P/L VGN-T250P/S VGN-T260P/L VGN-T270P/L	VGN-T2XP/L VGN-T2XP/S VGN-T2XRP/S	VGN-T16RLPS VGN-T26C/L VGN-T26C/S VGN-T26C/T VGN-T26SP/S VGN-T27C/L VGN-T27GP/L VGN-T27GP/S VGN-T27LP/L VGN-T27LP/S VGN-T27TP/L VGN-T27TP/S

∗ : CTO Model

This manual and the constituent data may not be replicated, copied nor reprinted in whole or in part without prior written authorization of Sony Corporation.

本マニュアルの一部，または全部について，無断でデータの複製，複写，転載することを禁じます。

9-876-404-05

English/Japanese
2005B0500-1
© 2005 Sony Corporation
Published by Sony EMCS VAIO-GSC [N]

Revision History

Suffix	Ver.	Date	Contents	QM No.
-01	Ver. 1	2005.01.13	First Edition	
-02	Ver. 2	2005.01.24	1 Front Page (Model Lineup), Page 1-1, Page 4-1, Page 4-4, Page 4-6, Page 4-8, Page 4-10, Page 4-12 to 4-13, Back Cover	N2004_146AK
-03	Ver. 3	2005.02.04	2 Front Page (Model Lineup), Page 1-1 to 1-2, Page 4-1, Page 4-4, Page 4-6, Page 4-8, Page 4-10, Page 4-12 to 4-13, Back Cover	N2004_151AK
-04	Ver. 4	2005.02.18	3 Front Page (Model Lineup), Page 1-2, Page 4-1, Page 4-4, Page 4-6, Page 4-8, Page 4-10, Page 4-12 to 4-13, Back Cover	N2004_163AK
-05	Ver. 5	2005.02.24	4 Page 4-7 to 4-8	N2004_166CK

<Remarks>